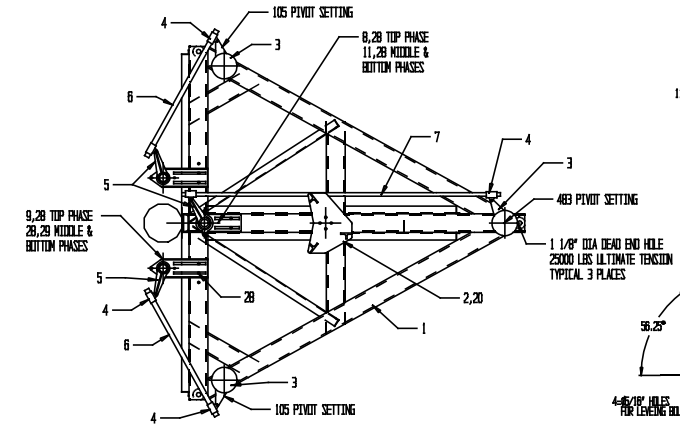

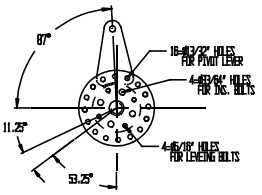

PIVOT SETTING DETAIL
LEFT HAND OPEN BLADE

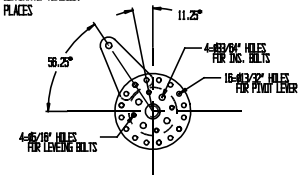

PIVOT SETTING DETAIL
FRONT RH OPEN BLADE

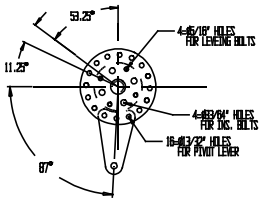

PIVOT SETTING DETAIL
RIGHT HAND OPEN BLADE

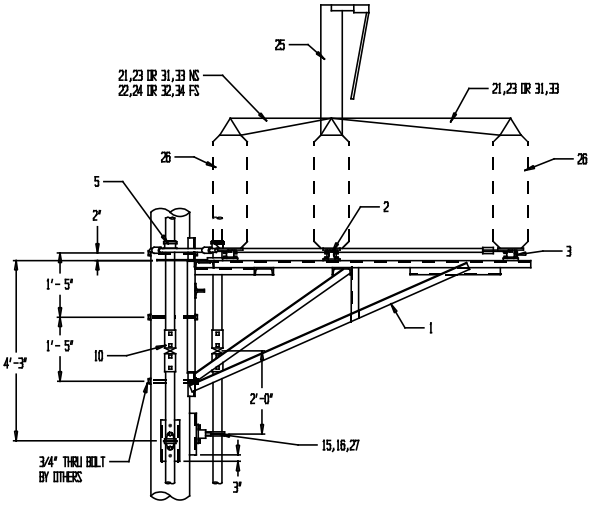

BOTTOM PHASE DETAIL

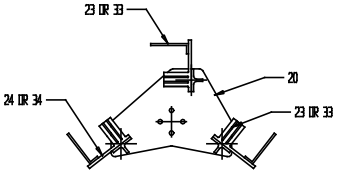

1200A CONTACT ASSY. SHOWN
600A TYP.

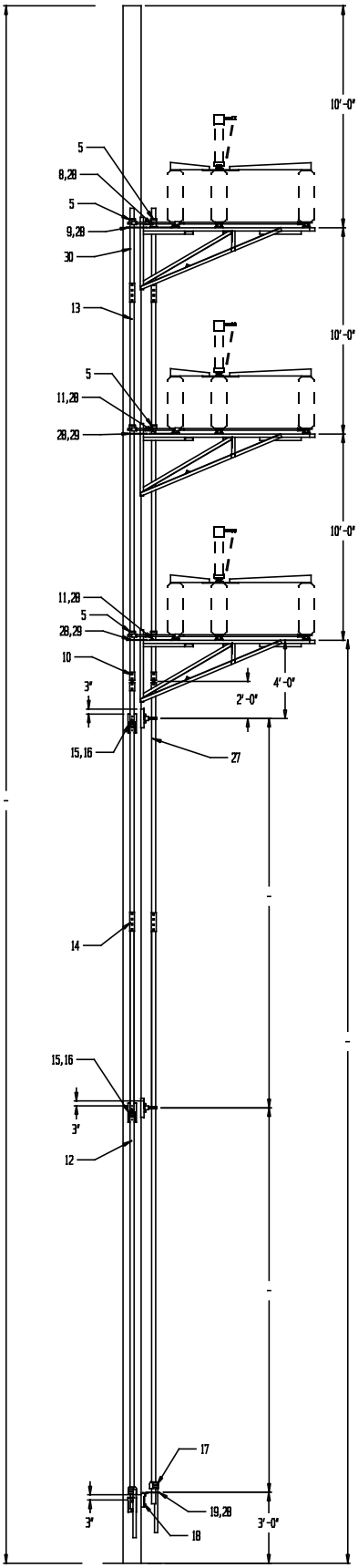

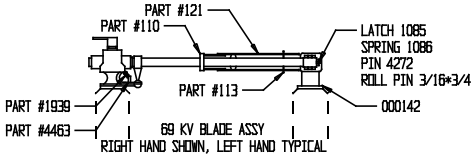

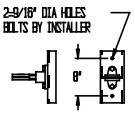

15,16 PIPE GUIDE ASSY

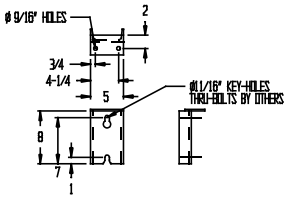

19-OPERATOR MTG. BRKT.

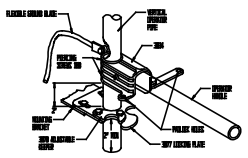

18,19-OPERATOR HANDLE DETAIL

QUANTITY				PART	MATERIAL	ITEM	DESCRIPTION
			-	3	A8531	-	34	69KV 600AMP JAW ASSY LH
			-	6	A8530	-	33	69KV 600AMP JAW ASSY RH
			-	3	A8509	COPPER	32	69KV 600AMP BLADE ASSY LH
			-	6	A8508	COPPER	31	69KV 600AMP BLADE ASSY RH
			3	3	RH601380	GALV	30	2" IPS PIPE SCH 40 @ 4'-0"
			4	4	A8251	ALUM	29	108/183 GUIDE PLATES
			24	24	-	GALV	28	CARRIAGE BOLT 1/2" X 1 1/2" N,LW
			3	3	RH601380	GALV	27	2" IPS PIPE SCH 40 @ 10'-0"
			12	12	-	-	26	INSULATOR 69KV TR216
			1	1	-	-	25	RUPTER ASSY 0891STN/4087-3
			3	-	A8581	-	24	69KV 1200AMP JAW ASSY LH
			6	-	A8580	-	23	69KV 1200AMP JAW ASSY RH
			3	-	A8569	COPPER	22	69KV 1200AMP BLADE ASSY LH
			6	-	A8568	COPPER	21	69KV 1200AMP BLADE ASSY RH
			3	3	A5895	ALUM	20	CONTACT MOUNTING PLATE
			3	3	A8289	ALUM	19	LOCKING PLATE ASSY
			3	3	003878SXG	STEEL	18	OPERATOR MOUNTING BRACKET
			1	1	A8286	GALV	17	OPERATOR HANDLE ASSY 3 WAY
			6	6	A8257	-	16	PIPE GUIDE ASSY
			6	6	007231SXG	ALUM	15	PIPE GUIDE MTG ASSY
			6	6	A8258	GALV	14	COUPLING 2" IPS
			3	3	RH601380	GALV	13	2" IPS PIPE SCH 40 @ 19'-0"
			3	3	RH601380	GALV	12	2" IPS PIPE SCH 40 @ 21'-0"
			2	2	000220AT	ALUM	11	PHASE GUIDE
			3	3	A8277	GALV	10	U-JOINT ASSY
			2	2	A8247/008888SXG	-	9	THRUST BEARING ASSY w/008888 MTG.
			1	1	A8248	-	8	THRUST BEARING ASSY WITH 1443 BRKT
			3	3	RH601300	GALV	7	3/4" IPS PIPE SCH 80 @ 7'-8"
			6	6	RH601280	GALV	6	3/4" IPS PIPE SCH 40 @ 3'-8"
			9	9	A8255	GALV	5	PIPE LEVER ASSY
			18	18	A8252	GALV	4	CLEVIS ASSY 3/4" IPS
			9	9	A8233	-	3	PIVOT ASSY 1 LEVER
			3	3	000867SXMGN	GALV	2	INSULATOR PEDESTAL
			3	3	A8351SP	ALUM	1	3D-69 STEEL POLE FRAME ASSY w/669-1 FLAT MOUNT BACK

1200A / 600A

TO:

CUSTOMER P.O.#

SERIAL NUMBER:

REVISIONS	DATE	BY	MARK
ADD ITEMS 31,32,33,34	7-3-00	NRP	A
ADD PIVOT DETAILS	9-17-08	NJR	B

69 KV — 600/1200 AMP

3006906/3254 OR 3006912/3254

SWITCH DN LD STEEL-POLE

DRAWING # SK980919

SHEET 1 OF 1

BY — DATE 9-25-98

APP'D BY — DATE

TURNER ELECTRIC CORPORATION
FAIRVIEW HEIGHTS, IL., USA