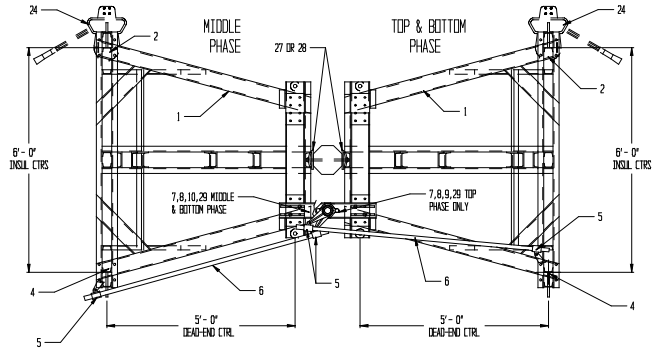

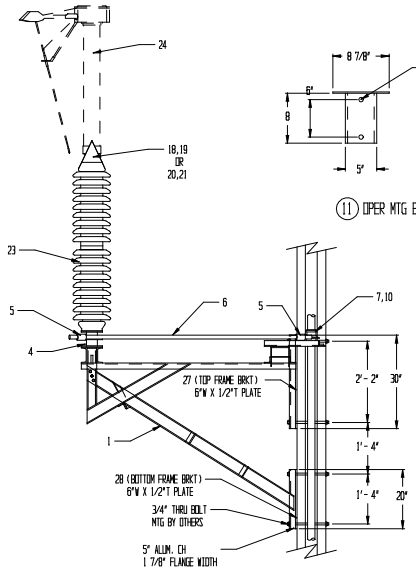

MIDDLE PHASE SHOWN

NOTE: CONVERTING EXIST. WOOD POLE MTG TO "LOB" STEEL POLE MTG REQUIRES PRT#AA11391 (INCLUDES PRT# 8,9,10,25,27,28)

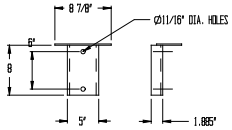

(11) OPER MTG BRKT DETAIL

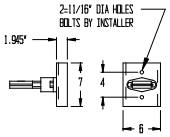

(14)(25) PIPE GUIDE DETAIL

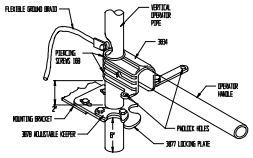

(12) OPERATOR HANDLE DETAIL

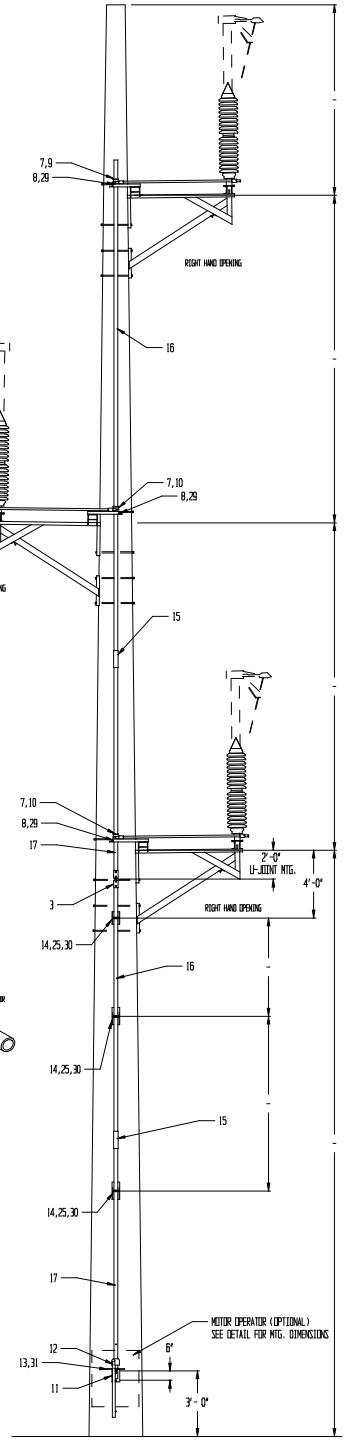

QUANTITY						PART	MATERIAL	ITEM	DESCRIPTION
					6		GALV	30	MACHINE BOLT 1/2"-13 X 1" LW
					8		GALV	29	CARRIAGE BOLT 1/2"-13 X 1 1/2" N,LW
					3	0011393XG	GALV	28	BOTTOM FRAME BRKT
					3	0011392XG	GALV	27	TOP FRAME BRKT
					-	-	-	26	-
					3	0114115X	ALUM	25	PIPE GUIDE MTG. BRKT.
					-			24	TECO RUPTIER (OPTIONAL)
					6	SEE ORDER		23	INSULATOR
					3	0001892XMG		22	JAW PEDESTAL & SPACER
					2	A9642		21	RH JAW ASSY 138KV 1200AMP
					2	A9652	COPPER	20	RH BLADE ASSY 138KV 1200AMP (2.5")
					1	A9641		19	LH JAW ASSY 138KV 1200AMP
					1	A9651	COPPER	18	LH BLADE ASSY 138KV 1200AMP (2.5")
					*	RH001390	GALV	17	2" IPS PIPE SCH. 80 @ (LENGTH VARIES w/POLE HEIGHT)
					*	RH001390	GALV	16	2" IPS PIPE SCH. 80 @ (LENGTH VARIES w/POLE HEIGHT)
					*	A9259	GALV	15	PIPE COUPLING (QTY VARIES w/POLE HEIGHT)
					*	A9258		14	P-GUIDE ASSY (34BB) (QTY VARIES w/POLE HEIGHT)
					1	A9269	ALUM	13	LOCKING PLATE ASSY
					1	A9265	GALV	12	OPER ASSY
					1	004228XX	ALUM	11	OPER BRKT
					2	0014144XX	ALUM	10	PHASE GUIDE
					1	A9247		9	T-BEARING ASSY
					3	0028010XX	ALUM	8	T-BEARING MTG BRKT
					3	A9255	GALV	7	7" LEVER ASSY
					3	RH001300	GALV	6	1" IPS PIPE SCH. 80 @ 80"
					8	A9253	GALV	5	1" CLEVIS ASSY
					3	A9241	ALUM	4	PIVOT ASSY (1 @ 429 LHB) (2 @ 483 RHB)
					1	A9277	GALV	3	PIPE TO PIPE U-JOINT ASSY.
					3	0017603XDMGH	GALV	2	INSULATOR PEDESTAL
					3	A9323	GALV	1	ICD-138 FRAME ASSY/MP FRAME

TO:

CUSTOMER P.O.# | SERIAL NUMBER:

REVISIONS	DATE	BY	MARK
REV PER APPROVAL	1-8-98	BW	A
REV PART #'S FOR ITEMS 18,19,20,21	9-17-03	KJR	B
REV (ING 14-17 TO SHOW VARIES w/POLE HEIGHT	7-15-04	KJR/LB	C

DRAWING # SK971204
SHEET 1 OF 1

BY	DATE
BJW	11-26-97
APP'D BY	DATE
KRP	9-18-03

138 KV 800 AMP

1CDT13806/1228 SIDE BREAK SWITCH ON S.P. LOB w/Ø 2-1/2" BLADES

TURNER ELECTRIC CORPORATION
FAIRVIEW HEIGHTS, IL., USA

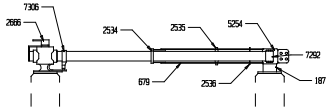

138 KV BLADE ASSY 2.5" DIA
RIGHT HAND SHOWN, LEFT HAND TYPICAL