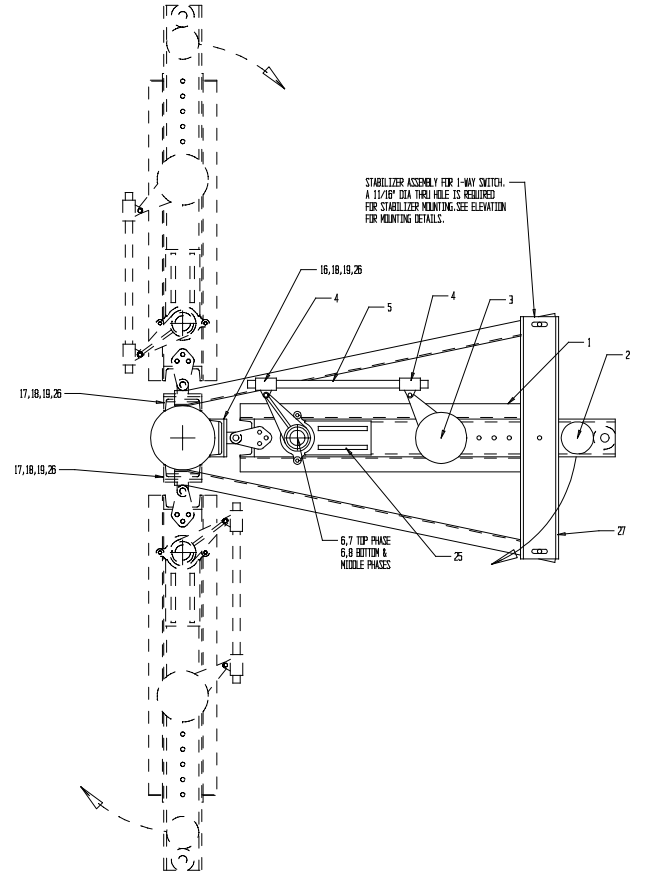

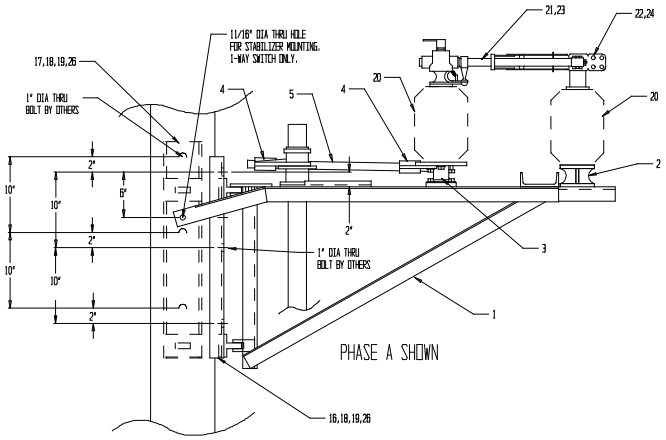

PHASE A SHOWN

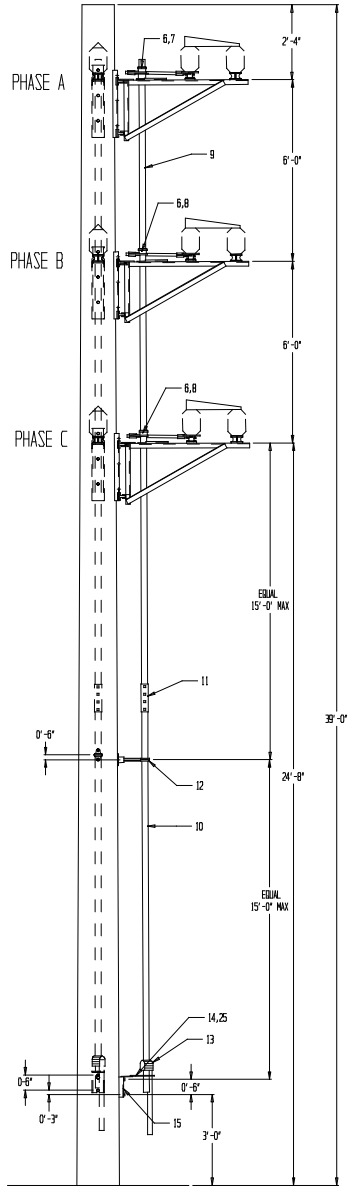

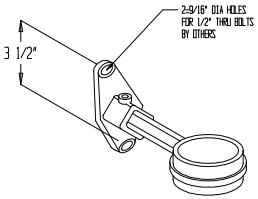

12-PIPE GUIDE ASSY

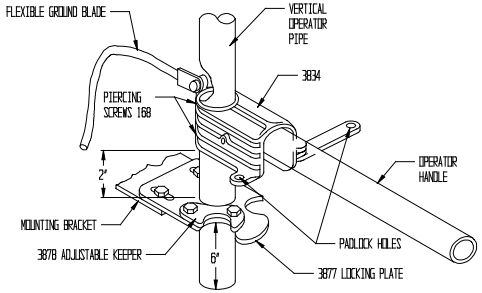

13-OPERATOR HANDLE DETAIL

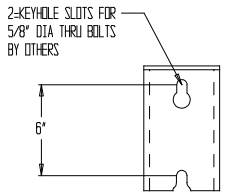

15-OPERATOR MOUNTING BRACKET

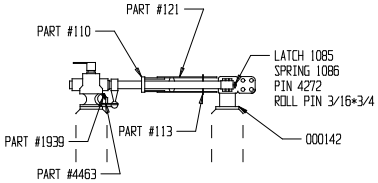

21,22,23,24-15 KV BLADE ASSY
RIGHT HAND SHOWN, LEFT HAND TYPICAL

QUANTITY					PART	MATERIAL	ITEM	DESCRIPTION
			-	-	9641/9642	ALUM	27	STABILIZER ASSEMBLY W/9-1/2"-13 X1 1/2" BOLT,NUT,2-FW
			72	48	24	-	GALV	26	MACHINE BOLT 5/8"-11 X 2 1/4" GRD 5
			24	16	8	-	GALV	25	CARRIAGE BOLT 1/2"-13 X 1 1/2"
			-	-	-	A9516/142	COPPER	24	JAW ASSY 15KV R.H. 600A
			-	-	-	A9500	COPPER	23	BLADE ASSY 15KV R.H. 600A
			9	6	3	A9567/142	COPPER	22	JAW ASSY 15KV R.H. 1200A
			9	6	3	A9550	COPPER	21	BLADE ASSY 15KV R.H. 1200A
			18	12	6	-	-	20	INSULATOR
			18	12	6	6787	GALV	19	BACK-UP PLATE
			18	12	6	6781	GALV	18	SUSPENSION LINK
			6	3	-	9637	GALV	17	CONCRETE POLE MOUNTING BRACKET THRU LINE
			3	3	3	9636	GALV	16	CONCRETE POLE MOUNTING BRACKET TAP LINE
			3	2	1	3879	ALUM	15	OPERATOR MTG BRKT
			3	2	1	A9269	ALUM	14	LOCKING PLATE ASSY
			3	2	1	A9264	GALV	13	OPERATING HANDLE ASSY
			3	2	1	A9257	-	12	PIPE GUIDE ASSY
			3	2	1	A9259	GALV	11	PIPE COUPLING
			3	2	1	RM001380	GALV	10	2" IPS SCH 40 PIPE @ 15'-0"
			3	2	1	RM001380	GALV	9	2" IPS SCH 40 PIPE @ 21'-0"
			6	4	2	220	ALUM	8	PHASE GUIDE
			3	2	1	A9248	-	7	THRUST BEARING ASSY
			9	6	3	A9255	GALV	6	PIPE LEVER ASSY
			9	6	3	RM001280	GALV	5	3/4" IPS SCH 40 PIPE @ 27"
			18	12	6	A9252	GALV	4	CLEVIS ASSY 3/4" IPS
			9	6	3	A9233	ALUM	3	PIVOT ASSY 1 LEVER (483)
			9	6	3	967	GALV	2	INSULATOR PEDESTAL
			9	6	3	A9300	ALUM	1	1AD-15 FRAME ASSY

TO:

CUSTOMER P.O.#

SERIAL NUMBER:

3AD-15-6/12
2AD-15-6/12
1AD-15-6/12

REVISIONS	DATE	BY	MARK

15 KV 1200 AMP

1AD01512/1796
CONCRETE POLE MOUNTED

DRAWING #	BY	DATE
SK940407	L.YAOL D	4-5-94
SHEET 1 OF 1	APP'D BY	DATE

TURNER ELECTRIC CORPORATION
FAIRVIEW HEIGHTS, IL., USA