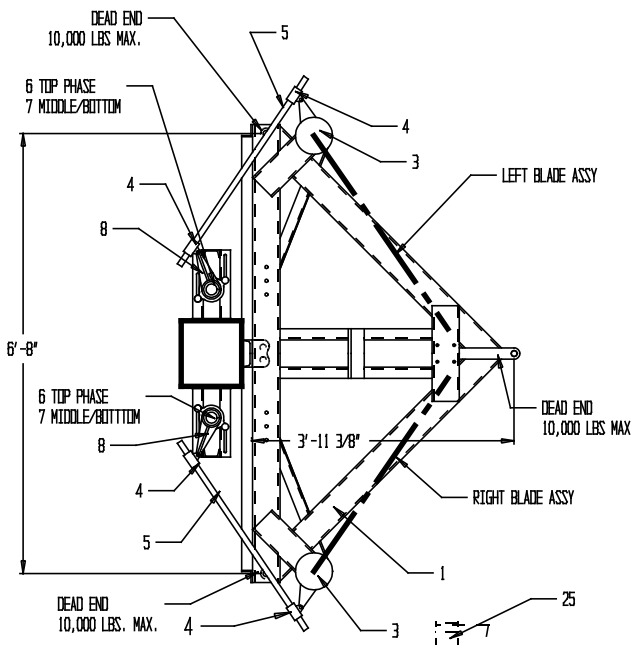

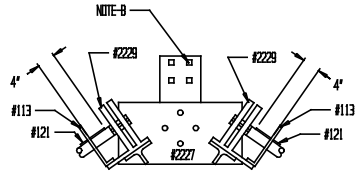

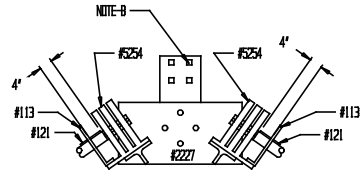

69 KV CONTACT ASSY (TYP.)

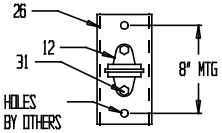

12,26 PIPE GUIDE DETAIL

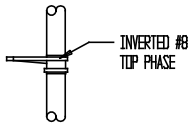

PIPE LEVER
TOP PHASE

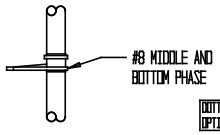

PIPE LEVER
MIDDLE & BOTTOM
PHASE

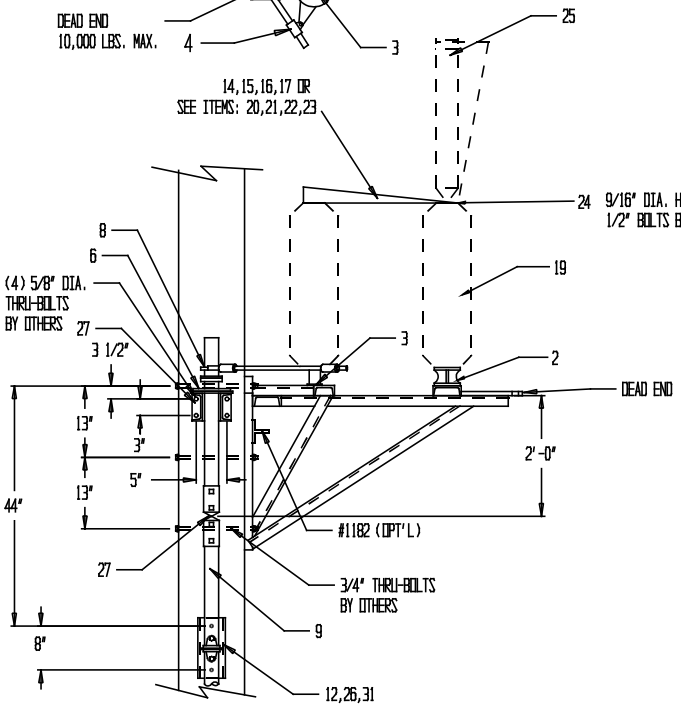

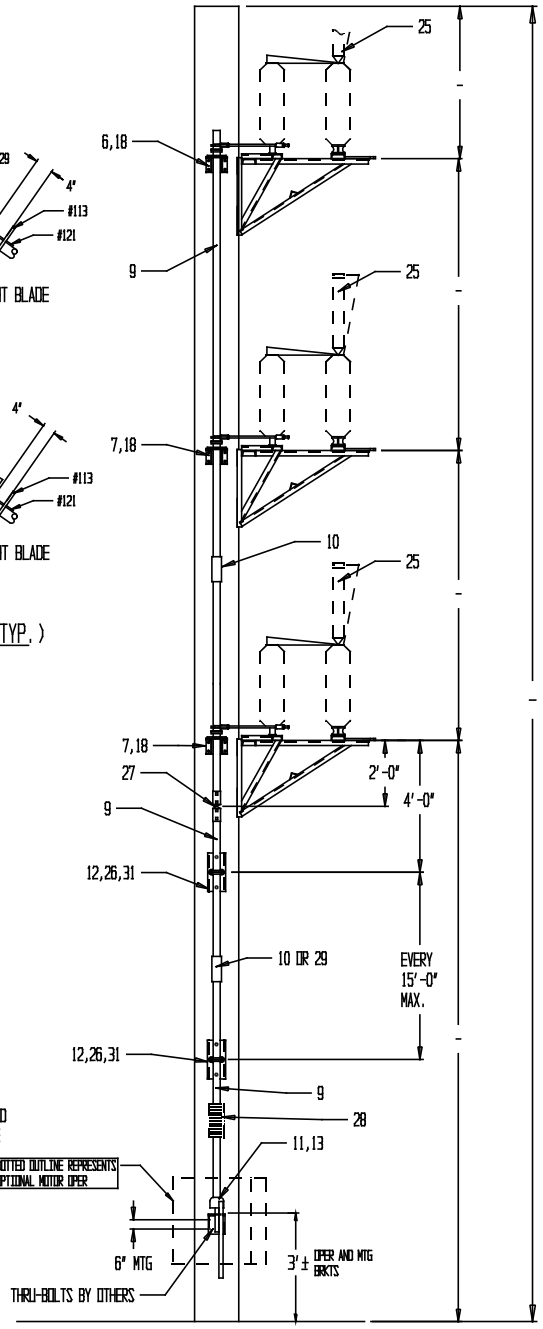

CAUTION: MIN 10'-0" PHASE SPACING REQ'D W/TECO RUPTER
MIN. 9'-0" PHASE SPACING REQ'D W/O TECO RUPTER

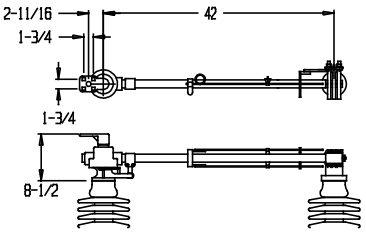

69 KV 600AMP BLADE ASSY (14,15,16,17)
69 KV 1200AMP BLADE ASSY (20,21,22,23)
RIGHT HAND SHOWN, LEFT HAND TYPICAL

QUANTITY 600 AMP	QUANTITY 1200 AMP	PART	MATERIAL	ITEM	DESCRIPTION
				32	
*	*	GALV		31	MACHINE BOLT 1/2"-13 X 1 1/2", N, LW
6	6	GALV	-	30	CARRIAGE BOLT, 1/2"-13 X 1 1/2", N, LW
				29	IGI ASSY (OPTIONAL)
			-	28	ROD INSULATOR (OPTIONAL)
2	2	A9277	GALV	27	U-JOINT ASSY
*	*	007231AXM	ALUM	26	PIPE GUIDE MTG BRKT (QTY. VARIES)
				25	INTERRUPTER (OPTIONAL)
3	3	A2227	ALUM	24	CONTACT PLATE
-	3	A9581	COPPER	23	JAW ASSY, 69KV 1200AMP LEFT HAND
-	3	A9580	COPPER	22	JAW ASSY, 69KV 1200AMP RIGHT HAND
-	3	A9559	COPPER	21	BLADE ASSY, 69KV 1200A LEFT HAND W/O JAW
-	3	A9558	COPPER	20	BLADE ASSY, 69KV 1200A RIGHT HAND W/O JAW
9	9	SEE ORDER		19	INSULATOR TR216 69KV
6	6	A4951	ALUM	18	THRUST BEARING/PHASE GUIDE MTG BRKT
3	-	A9531	COPPER	17	JAW ASSY, 69KV 600AMP RIGHT HAND
3	-	A9530	COPPER	16	JAW ASSY, 69KV 600AMP RIGHT HAND
3	-	A9509	COPPER	15	BLADE ASSY, 69KV 600A RIGHT HAND W/O JAW
3	-	A9508	COPPER	14	BLADE ASSY, 69KV 600A RIGHT HAND W/O JAW
2	2	A9266	ALUM	13	OPER MTG ASSY
*	*	A9257		12	PIPE GUIDE ASSY (QTY. VARIES)
1	1	A9284		11	2 WAY OPER HANDLE ASSY
*	*	A9259	GALVSTL	10	2" PIPE COUPLING (QTY. VARIES)
*	*	RM301380	GALVSTL	9	2" SCH 40 OPER PIPE (QTY. VARIES)
6	6	A9255	GALVSTL	8	7" PIPE LVR ASSY
4	4	001414AX	ALUM	7	PHASE GUIDE
2	2	A9247		6	THRUST BEARING ASSY
6	6	RM301280	GAVSTL	5	3/4 SCH40 REACH ROD @ 3'-6"
12	12	A9252	GAVSTL	4	3/4 CLEVIS ASSY
6	6	A9233	ALUM	3	1 LEVER PIVOT ASSY (105)
3	3	000967SIDXMG	GALVSTL	2	INSULATOR PEDESTAL
3	3	A9338	ALUM	1	2D 69KV SWITCH FRAME

TO:

CUSTOMER P.O.# | SERIAL NUMBER

REVISIONS	DATE	BY	MARK
ADD ITEM #32	5-6-99	MRP	A
ADD P.G. @ 4'; REVISE PART #'S	03-7-03	MRP	B
ITEM 26 WAS 007231AX	11-21-05	KURVLD	C

69 KV — 600/1200 AMP
2006906/2188 69KV 600A
2006912/2188 69KV 1200A
TWO WAY SWITCH ON RECT. WOOD POLE

DRAWING # SK930310
SHEET 1 OF 1

BY	DATE
TRO	3-8-99
APP'D BY	DATE

TURNER ELECTRIC CORPORATION
FAIRVIEW HEIGHTS, IL., USA