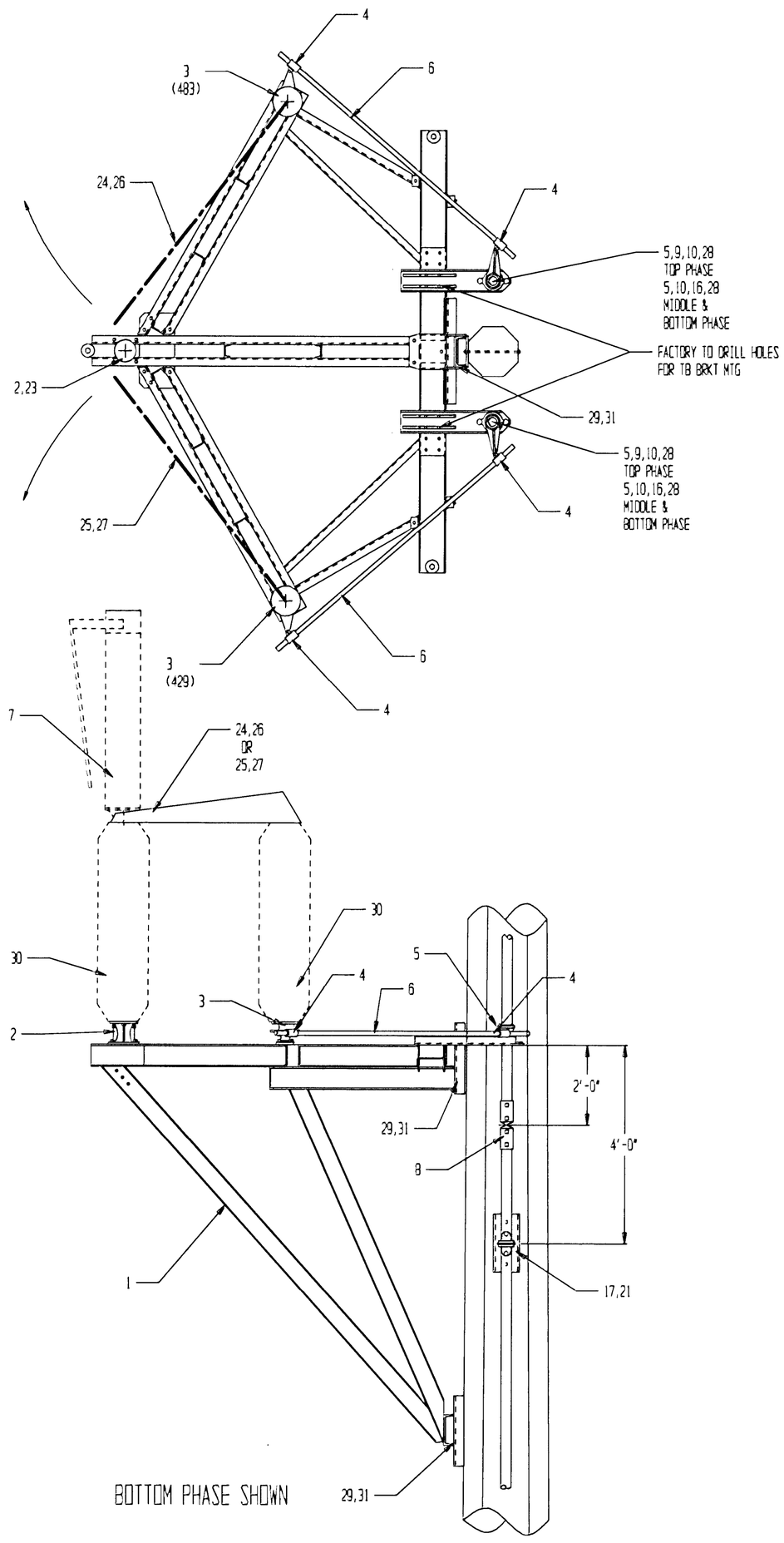

BOTTOM PHASE SHOWN

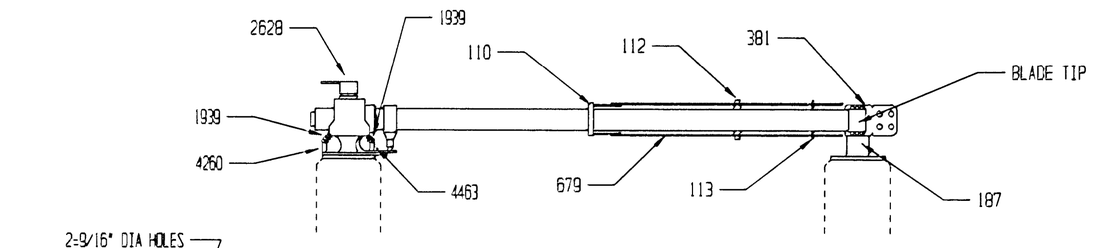

115 KV 1200A BLADE ASSY
RIGHT HAND SHOWN, LEFT HAND TYPICAL

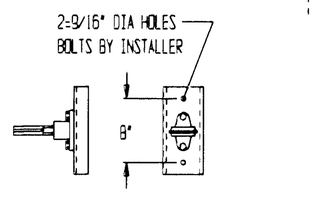

17,21 PIPE GUIDE DETAIL

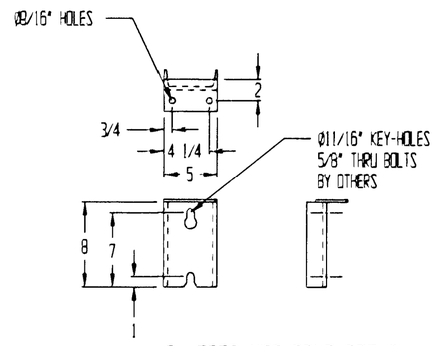

19 OPER MTG BRKT DETAIL

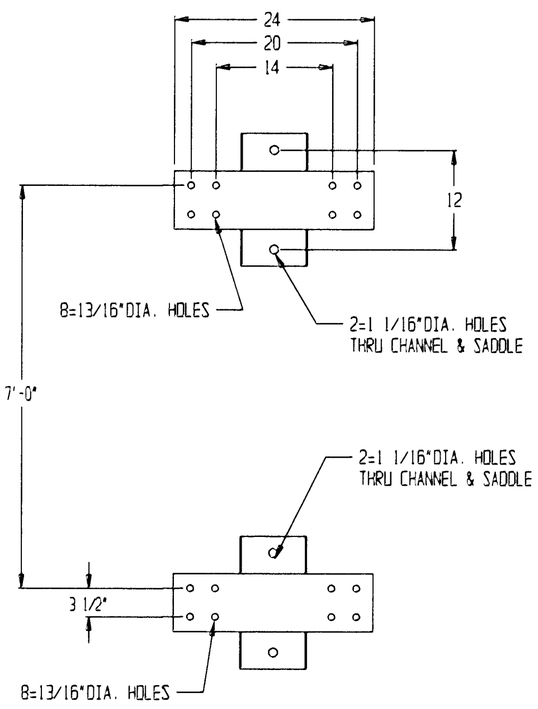

29 FRAME MTG BRKT DETAIL

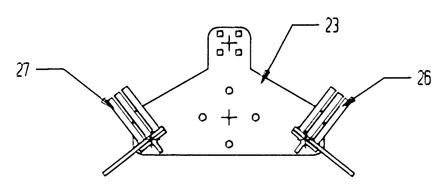

23 CONTACT MTG PLATE DETAIL

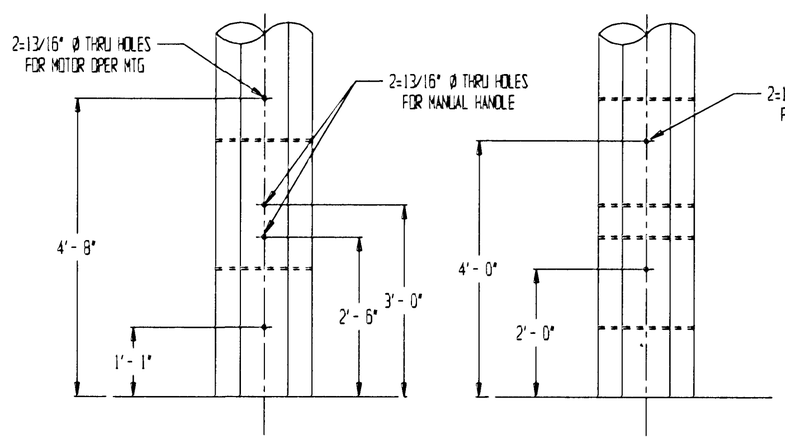

MOTOR OPER MTG DETAIL

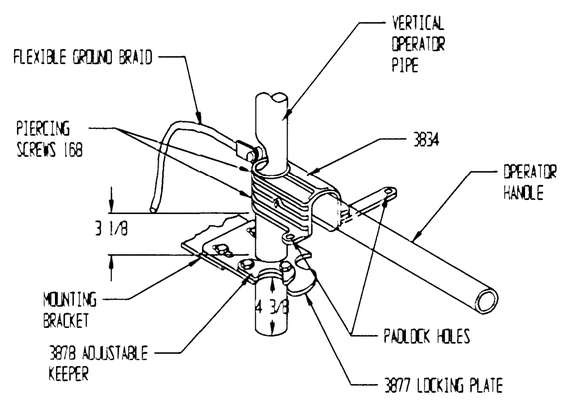

18,20 OPERATOR HANDLE DETAIL

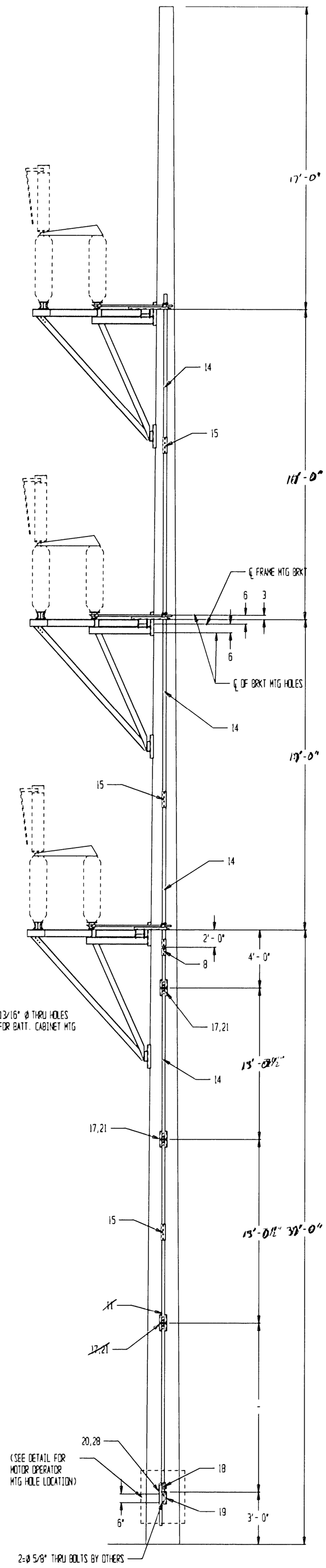

QUANTITY	PART	MATERIAL	ITEM	DESCRIPTION
	-	-	35	-
	-	-	34	-
	-	-	33	-
	-	-	32	-
48	-	GALV	31	MACHINE BOLT 3/4"-10 X 2 1/2" N,LW
9	-	-	30	INSULATORS TR286 115KV
6	012122SXG	GALV	29	FRAME MTG BRKT
16	-	GALV	28	CARRIAGE BOLT 1/2"-13 X 1 1/2" N,LW
3	A9581	COPPER	27	115KV 1200AMP L.H. JAW ASSY
3	A9580	COPPER	26	115KV 1200AMP R.H. JAW ASSY
3	A9561	COPPER	25	115KV 1200AMP L.H. BLADE ASSY
3	A9560	COPPER	24	115KV 1200AMP R.H. BLADE ASSY
3	A2730	ALUM	23	CONTACT MOUNTING PLATE
-	-	-	22	-
*	007231AX	ALUM	21	PIPE GUIDE MTG BRKT (QTY VARIES w/POLE HEIGHT)
2	A9269	ALUM	20	LOCKING PLATE ASSY
2	003879AX	ALUM	19	OPERATOR MOUNTING BRACKET
1	A9285	GALV	18	OPERATOR HANDLE ASSY (2 WAY)
*	A9257	-	17	PIPE GUIDE ASSY (QTY VARIES w/POLE HEIGHT)
4	001414AA	-	16	CONTROL PIPE GUIDE
*	A9259	GALV	15	COUPLING 2" IPS (QTY VARIES w/POLE HEIGHT)
*	RM301390	GALV	14	2" IPS PIPE SCH 80 @ (VARIES w/POLE HEIGHT)
-	-	-	13	-
-	-	-	12	-
-	-	-	11	-
6	002909SXG	GALV	10	THRUST BEARING BRACKET
2	A9247	-	9	THRUST BEARING ASSY
2	A9277	GALV	8	U-JOINT ASSY
-	SEE ORDER	-	7	INTERRUPTER
6	RM301320	GALV	6	1" IPS PIPE SCH 80 @ 6'-4"
6	A9255	GALV	5	PIPE LEVER ASSY
12	A9253	GALV	4	CLEVIS ASSY 1" IPS
6	A9241	GALV	3	PIVOT ASSY 1 LEVER 3=429,3=483
3	001760SDXMGM	GALV	2	INSULATOR PEDESTAL
3	A9342	ALUM	1	2D-115-6/12 POLE FRAME ASSY

TO:

CUSTOMER P.O.#

SERIAL NUMBER:

REVISIONS	DATE	BY	MARK

115 KV 1200 AMP

2D11512/2217 2-WAY P.O.P.
ON L.D. STEEL POLE

DRAWING #	BY	DATE
SK020720	MJR	7-24-02
SHEET 1 OF 1	APP'D BY MRP	DATE 7-25-02

TURNER ELECTRIC CORPORATION
FAIRVIEW HEIGHTS, IL., USA