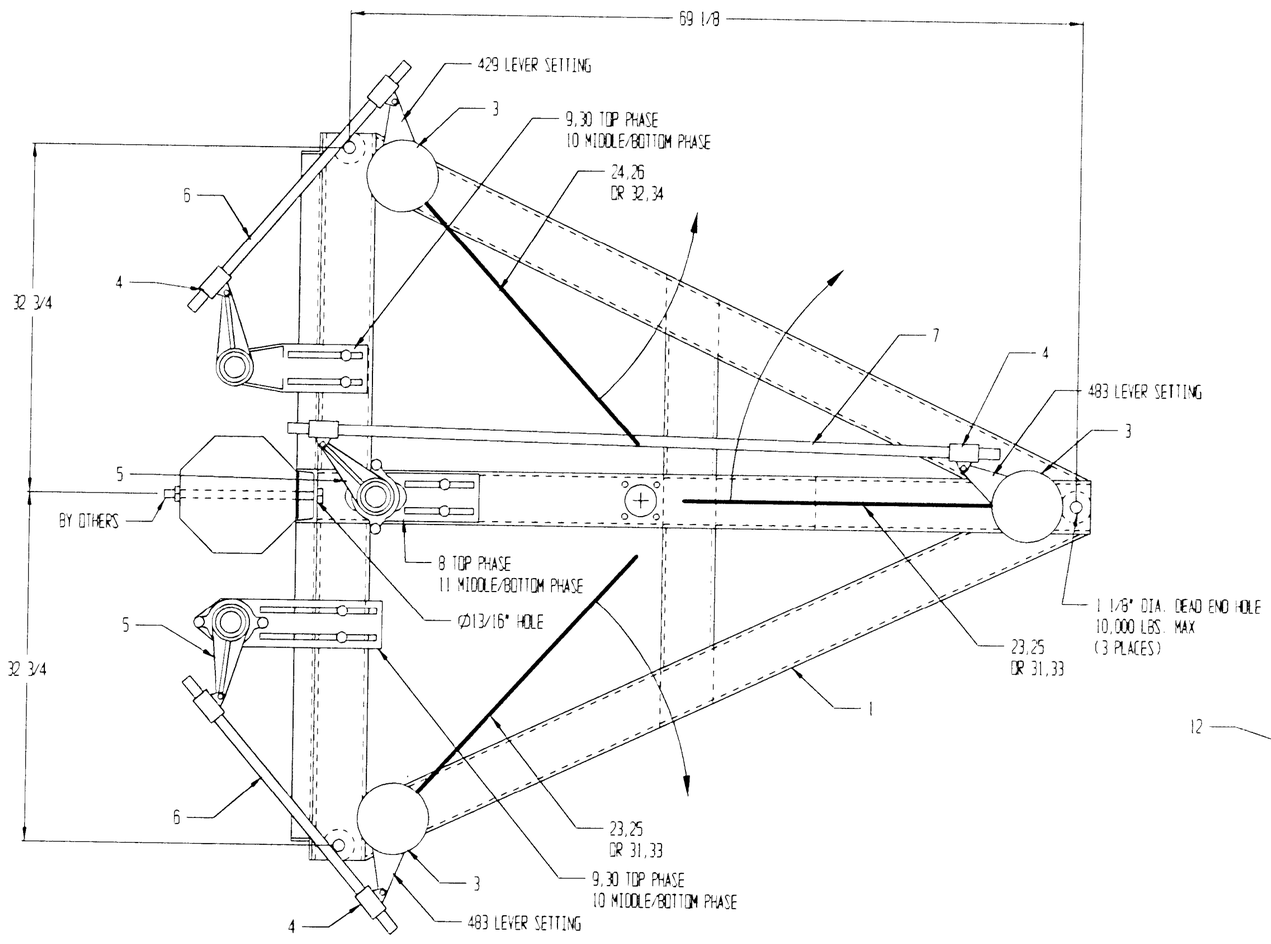

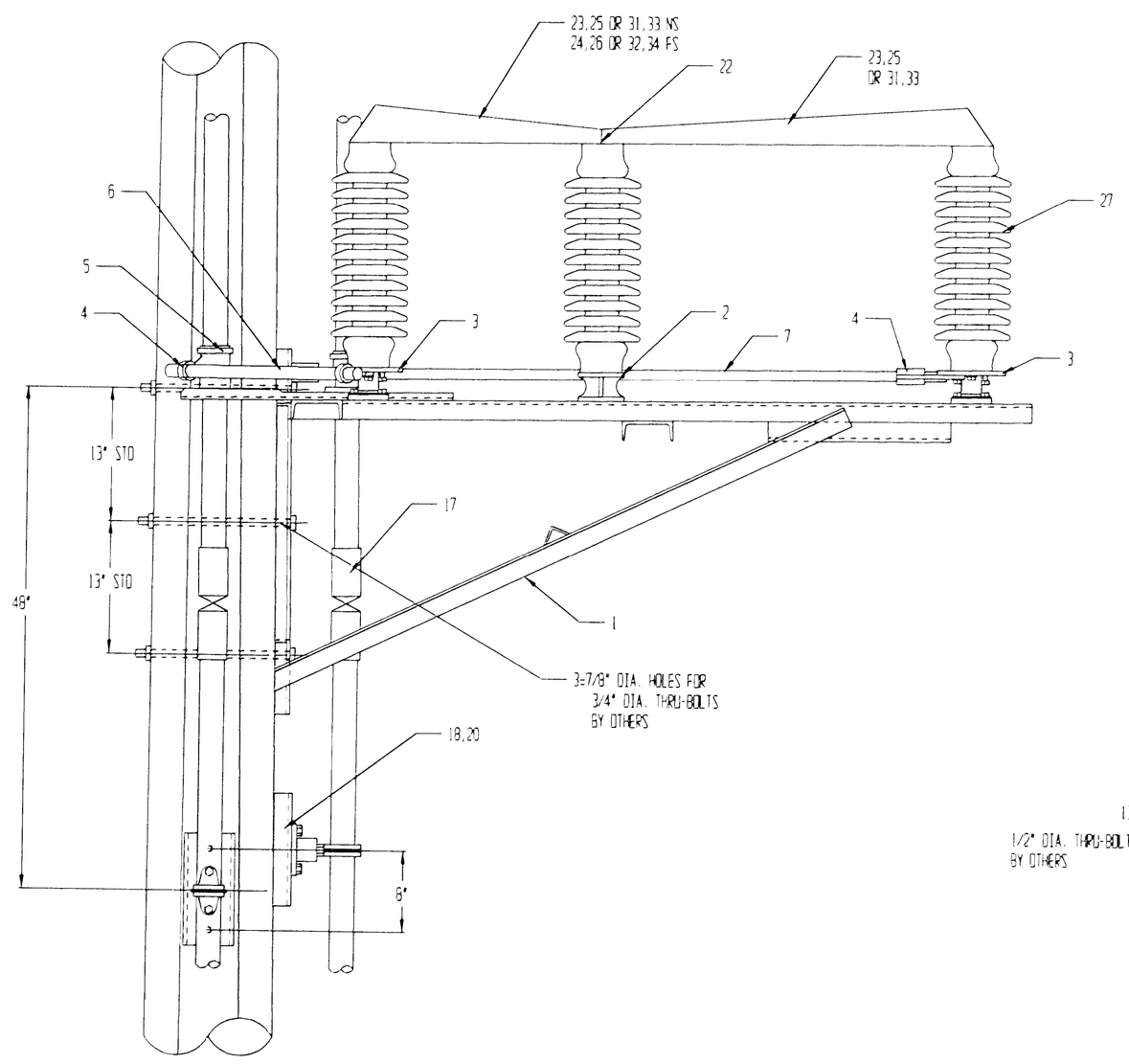

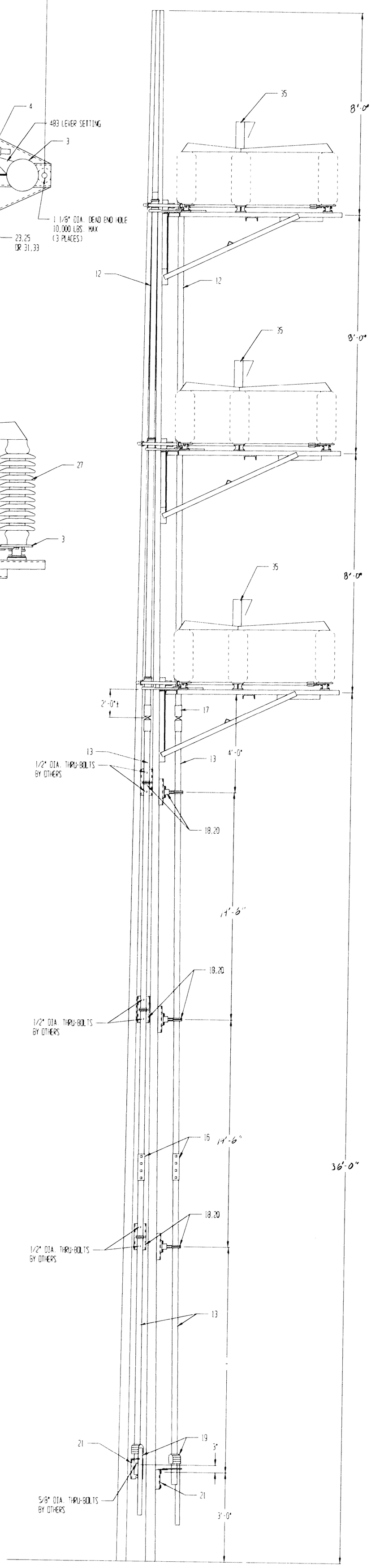

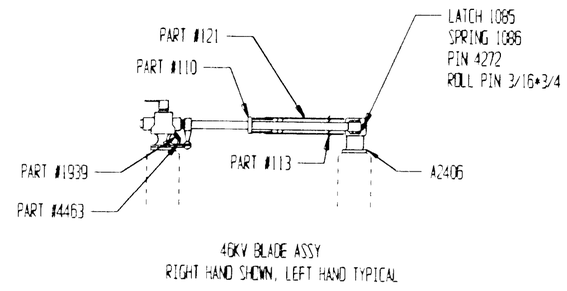

46KV BLADE ASSY
RIGHT HAND SHOWN, LEFT HAND TYPICAL

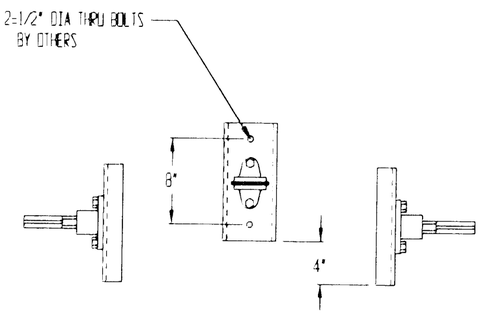

18, 20 PIPE GUIDE DETAIL

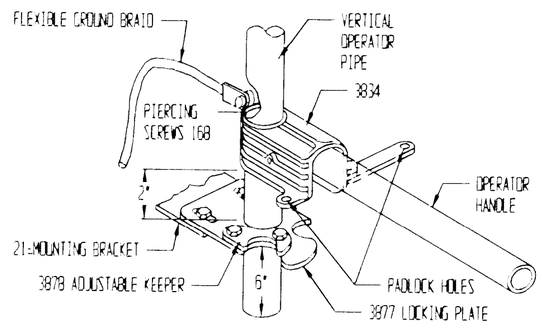

19 OPERATOR HANDLE DETAIL

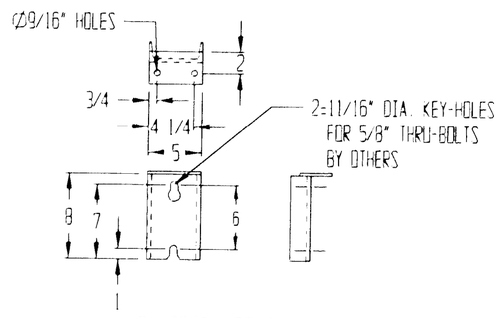

21 OPER MTG BRKT DETAIL

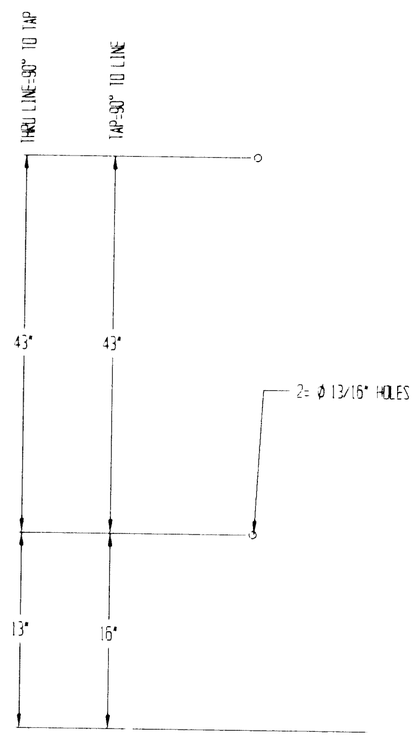

MOTOR OPERATOR
MOUNTING DETAIL
(OPTIONAL)

QUANTITY						PART	MATERIAL	ITEM	DESCRIPTION
				1	1	-	-	35	TECO RUPTER ASSY (3 PHASE SET, OPTIONAL)
				-	3	A9527	-	34	46KV 600AMP LEFT-HAND JAW ASSY
				-	6	A9526	-	33	46KV 600AMP RIGHT-HAND JAW ASSY
				-	3	A9507	COPPER	32	46KV 600AMP LEFT-HAND BLADE ASSY
				-	6	A9506	COPPER	31	46KV 600AMP RIGHT-HAND BLADE ASSY
				2	2	003698SXG	GALV	30	THRUST BEARING MTG BRKT
				-	-	-	-	29	-
				-	-	-	-	28	-
				12	12	-	-	27	46KV INSULATOR (OPTIONAL)
				3	-	A9577	-	26	46KV 1200AMP LEFT-HAND JAW ASSY
				6	-	A9576	-	25	46KV 1200AMP RIGHT-HAND JAW ASSY
				3	-	A9557	COPPER	24	46KV 1200AMP LEFT-HAND BLADE ASSY
				6	-	A9556	COPPER	23	46KV 1200AMP RIGHT-HAND BLADE ASSY
				3	3	A2406	ALUM	22	CONTACT PLATE
				3	3	A9266	ALUM	21	OPER MTG & LOCKING PLATE ASSY
				*	*	007231AX	ALUM	20	PIPE GUIDE MOUNTING BRKT (VARIES WITH POLE HEIGHT)
				1	1	A9286	GALV	19	OPERATOR HANDLE ASSY, 3-WAY
				*	*	A9257	-	18	PIPE GUIDE ASSY (VARIES WITH POLE HEIGHT)
				3	3	A9277	GALV	17	U-JOINT ASSY-PIPE TO PIPE
				*	*	A9259	GALV	16	2" PIPE COUPLING (VARIES WITH POLE HEIGHT)
						-	-	15	-
						-	-	14	-
				*	*	RM301380	GALV	13	2" IPS SCH.40 PIPE (VARIES WITH POLE HEIGHT)
				1	1	RM301380	GALV	12	2" IPS SCH.40 PIPE @ 21'-0"
				2	2	000220ATX	ALUM	11	PHASE GUIDE
				4	4	A9250	ALUM	10	PHASE GUIDE
				2	2	A9247	-	9	T-BEARING ASSY
				1	1	A9248	-	8	T-BEARING ASSY w/1443 MTG
				3	3	RM301280	GALV	7	3/4" SCH.40 PIPE @ 5'-8"
				6	6	RM301280	GALV	6	3/4" SCH.40 PIPE @ 2'-6"
				9	9	A9255	GALV	5	7" LEVER ASSY
				18	18	A9252	GALV	4	3/4" CLEVIS ASSY
				9	9	A9233	ALUM	3	PIVOT ASSY 1 LEVER (6=483 X 3=429)
				3	3	000967SDXMGM	GALV	2	INSULATOR PEDESTAL
				3	3	A13255	ALUM	1	30-46 FRAME ASSY LDSP MTG

3D04612/3243
3D04606/3243

TO:

CUSTOMER P.O.#

SERIAL NUMBER:

REVISIONS	DATE	BY	MARK

46 KV — 600/1200 AMP

3D04606/3243 LDSP POP MTD AIR SWITCH
3D04612/3243 LDSP POP MTD AIR SWITCH

DRAWING #	BY	DATE
SK001002	WRP	10-6-00
SHEET 1 OF 1	APP'D BY	DATE
	LD	10-10-00

TURNER ELECTRIC CORPORATION
FAIRVIEW HEIGHTS, IL., USA