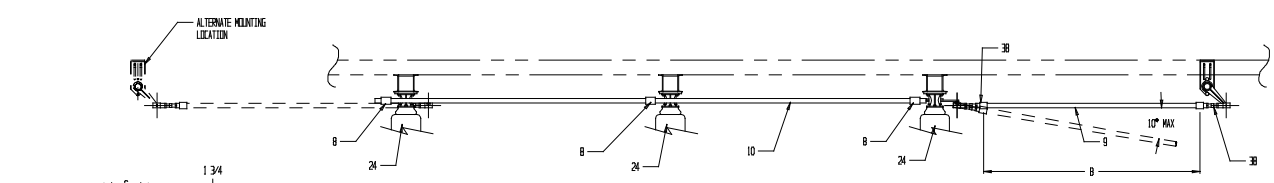

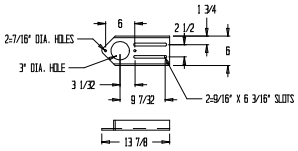

(11) THRUST BEARING MTG BRKT DETAIL

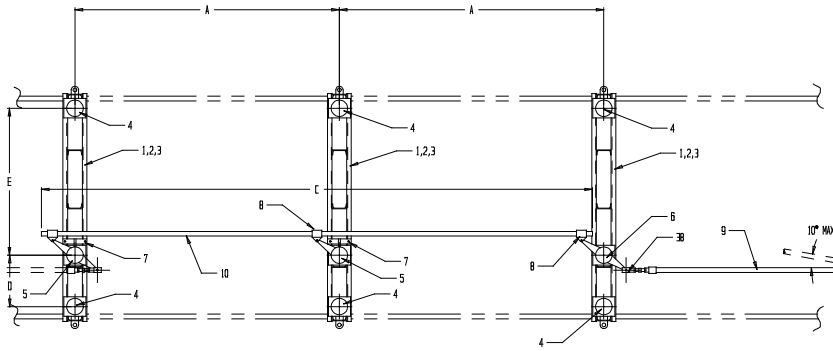

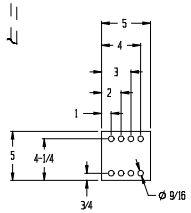

(23) EXTENSION PLATE DETAIL

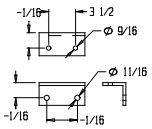

(22) OPERATOR MTG BRKT DETAIL

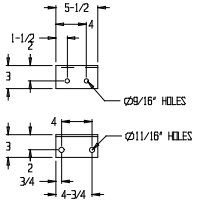

(14) THRUST BRG & PIPE GUIDE MTG BRKT DETAIL

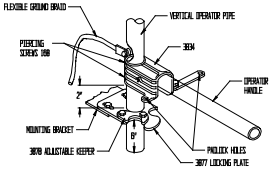

(20) (21) OPERATOR HANDLE DETAIL

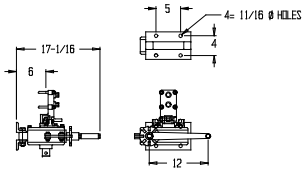

(36) OPTIONAL WORM GEAR OPERATOR

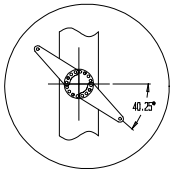

PIVOT SETTING DETAIL

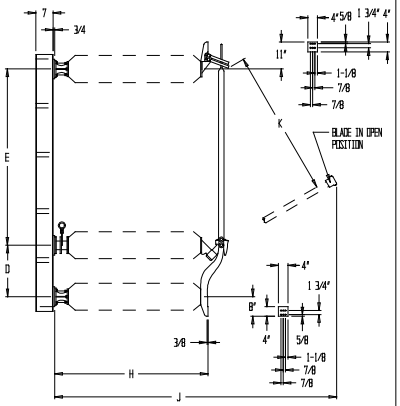

(25) (26) (27) BLADE DETAIL

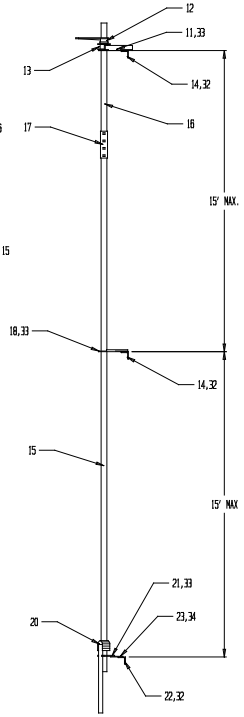

DIMENSIONS (in)										
KV	A	B	C	D	E	F	G	H*	J*	K
115	84	216	180	21	60	93	89	53 1/2	119	49 3/8
138	96	216	204	21	72	105	101	62 1/2	138	59 3/4
161	108	216	228	21	84	117	113	70 1/2	155 3/8	70 1/4

* ADD 3/4" TO H AND J DIMENSIONS WHEN ADDING A VACUUM INTERRUPTER TO SWITCH

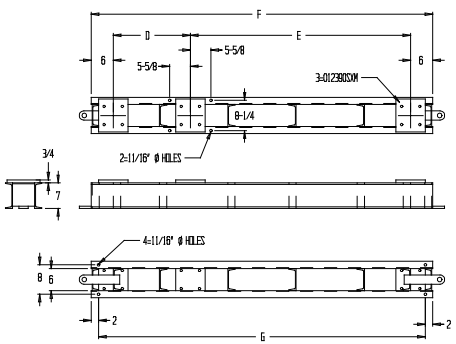

(1)(2)(3) SWITCHBASE DETAIL

QUANTITY						PART	MATERIAL	ITEM	DESCRIPTION
2	2	2	2	2	2	A9279	GALV	38	CLEVIS CONVERTER
-	-	-	-	-	-	-	-	37	-
-	-	-	-	-	-	A11281	-	36	WORM GEAR OPER (OPTIONAL)
12	12	12	12	12	12	004572AX	ALUM	35	WEDGE WASHER
2	2	2	2	2	2	-	GALV	34	MACHINE BOLT 1/2"-13 X 1 1/2" N,LW
6	6	6	6	6	6	-	GALV	33	CARRIAGE BOLT 1/2"-13 X 1 1/2" N,LW
6	6	6	6	6	6	-	GALV	32	MACHINE BOLT 5/8"-11 X 1 3/4" N,LW
12	12	12	12	12	12	-	GALV	31	MACHINE BOLT 5/8"-11 X 2 1/2" N,LW
3	-	-	-	-	-	DL064271X07362	ALUM	30	TMK40AV BLADE ASSY 161KV 1200AMP
-	3	-	-	-	-	DL064259B1G5	ALUM	29	TMK40AV BLADE ASSY 138KV 1200AMP
-	-	3	-	-	-	DL064259B1G3	ALUM	28	TMK40AV BLADE ASSY 115KV 1200AMP
-	-	-	3	-	-	DL064271X0B7G2	ALUM	27	TMK40AV BLADE ASSY 161KV 600 AMP
-	-	-	-	3	-	DL064271X0B8G2	ALUM	26	TMK40AV BLADE ASSY 138KV 600 AMP
-	-	-	-	-	3	DL064259X12G2	ALUM	25	TMK40AV BLADE ASSY 115KV 600 AMP
9	9	9	9	9	9	SEE ORDER	-	24	INSULATOR
1	1	1	1	1	1	005866SXG	GALV	23	EXTENSION PLATE
1	1	1	1	1	1	003860SXG	GALV	22	OPERATOR MTG BRKT
1	1	1	1	1	1	A9269	ALUM	21	LOCKING PLATE ASSY
1	1	1	1	1	1	A9265	GALV	20	OPERATING HANDLE ASSY
-	-	-	-	-	-	-	-	19	-
1	1	1	1	1	1	A9290	GALV	18	PIPE GUIDE
1	1	1	1	1	1	A9259	GALV	17	2" IPS PIPE COUPLING
1	1	1	1	1	1	RN301390	GALV	16	2" IPS SCH 80 PIPE @ 10'- 6"
1	1	1	1	1	1	RN301390	GALV	15	2" IPS SCH 80 PIPE @ 21'- 0"
2	2	2	2	2	2	007133SXG	GALV	14	THRUST BRG/PIPE GUIDE MTG BRKT
1	1	1	1	1	1	A9247	-	13	THRUST BEARING ASSY
1	1	1	1	1	1	A12515	GALV	12	PIPE LEVER ASSY (11")
1	1	1	1	1	1	011982SXG	GALV	11	THRUST BEARING MTG BRKT
1	1	1	1	1	1	RN301370	GALV	10	1 1/2" IPS SCH 80 PIPE @ (SEE DIM. C)
1	1	1	1	1	1	RN301370	GALV	9	1 1/2" IPS SCH 80 PIPE @ (SEE DIM. B)
5	5	5	5	5	5	A9254	GALV	8	1 1/2" IPS CLEVIS ASSY
2	2	2	2	2	2	A9294	GALV	7	BLADE STOP (@ 1/4" MTG)
1	1	1	1	1	1	A9246-1	GALV	6	PIVOT ASSY 2 LEVER
2	2	2	2	2	2	A9245	GALV	5	PIVOT ASSY 1 LEVER
6	6	6	6	6	6	005735SXDMGM	GALV	4	INSULATOR PEDESTAL
3	-	-	3	-	-	012733SXG	GALV	3	TMK40A-161 SWITCH BASE
-	3	-	-	3	-	012732SXG	GALV	2	TMK40A-138 SWITCH BASE
-	-	3	-	-	3	012731SXG	GALV	1	TMK40A-115 SWITCH BASE

TMK40AV161 2/3	TMK40AV138 2/3	TMK40AV115 2/3	TMK40AV161 0/3	TMK40AV138 0/3	TMK40AV115 0/3

TO:

CUSTOMER P.O.#

SERIAL NUMBER:

REVISIONS	DATE	BY	MARK
REV PART # FOR ITEMS 25-30, DEL #37	5-21-02	MJR	A
REMOVED STATIONARY ARCING HORN	8-28-03	MJR	B

KV 600/1200 AMP

TMK40AV 115 THRU 161 600/1200AMP
VERTICALLY MOUNTED CONTROL MECH

DRAWING # SK020305
SHEET 1 OF 1

BY	DATE
R.W	3-14-02
APP'D BY	DATE

TURNER ELECTRIC CORPORATION
FAIRVIEW HEIGHTS, IL., USA