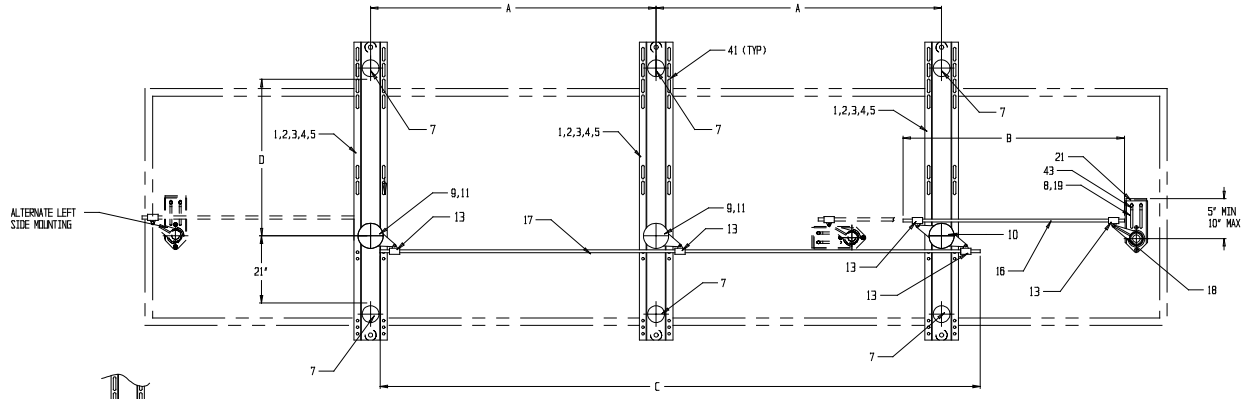

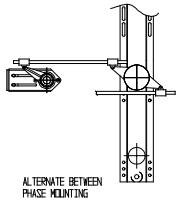

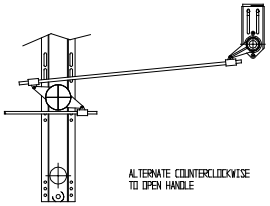

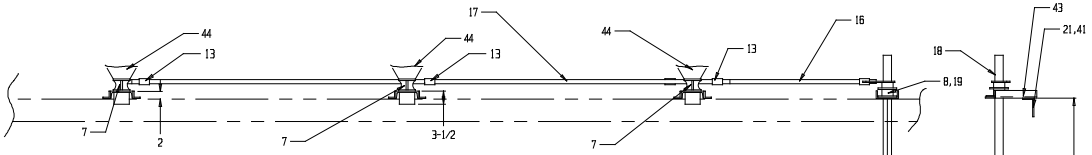

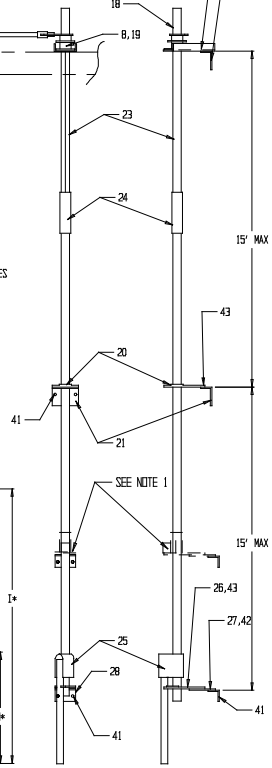

NOTE 1: FOR OPTIONAL KIRK KEY MOUNTING
PROVISION, ADD THE FOLLOWING:
1 = A4301 KIRK KEY MTG BRKT
1 = 005966SXG EXTENSION PLATE
1 = 003860SXG MOUNTING BRKT
2 = MACHINE BOLT, 5/8-11 X 1 3/4",N,LW
2 = MACHINE BOLT, 1/2-13 X 1 1/2",N,LW
2 = CARRIAGE BOLT, 1/2-13 X 1 1/2",N,LW

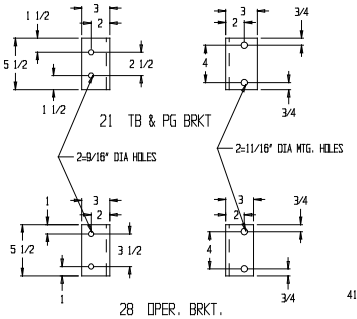

21 TB & PG BRKT

28 OPER. BRKT.

DIMENSIONS (in.)									
KV	A	B	C	D	E	F	G	H*	I*
15	36	96	84	19	54	N/A	N/A	17 7/8	53 3/4
23	48	96	108	24	59	N/A	N/A	21 7/8	62 3/4
34.5	60	120	132	27	62	N/A	N/A	25 7/8	69 3/4
46	72	120	156	33	68	40 7/8	45 1/8	29 7/8	79 3/4
69	84	120	180	45	80	40 7/8	45 1/8	37 7/8	99 3/4

*: ADD 3/4" TO H & I WHEN MOUNTING AN INTERRUPTER ON SWITCH

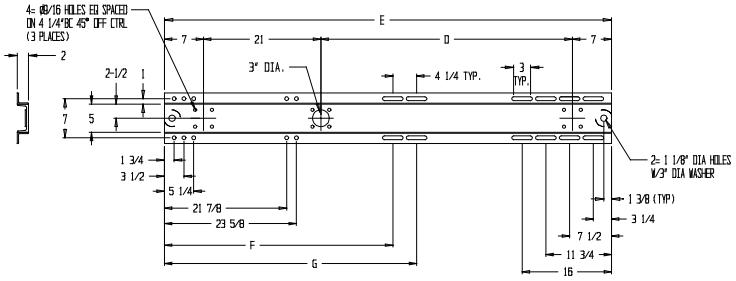

1,2,3,4,5 SWITCH BASE DETAIL

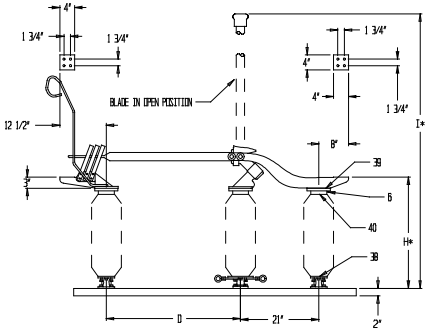

ITEMS 29-33 BLADE DETAIL

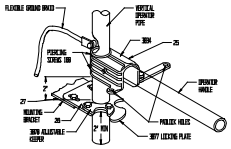

25,26 OPERATOR HANDLE DETAIL

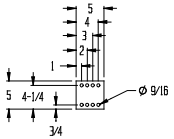

27 OPER. EXTENSION PLATE DETAIL

69KV/2000A	46KV/2000A	34.5KV/2000	23KV/2000A	15KV/2000A	PART	MATERIAL	ITEM	DESCRIPTION
-	-	-	-	-	-	-	44	INSULATOR-SEE ORDER FOR DESCRIPTION
9	9	9	9	9	-	-	44	INSULATOR-SEE ORDER FOR DESCRIPTION
6	6	6	6	6	-	GALV	43	CARRIAGE BOLT 1/2-13 X 1 1/2 NUT,LW
2	2	2	2	2	-	GALV	42	MACHINE BOLT 1/2-13 X 1 1/2 NUT,LW
18	18	18	18	18	-	GALV	41	MACHINE BOLT 5/8-11 X 1 3/4 NUT,LW
36	36	36	36	36	-	GALV	40	MACHINE BOLT 1/2-13 X 2, LW
36	36	36	36	36	-	GALV	39	MACHINE BOLT 5/8-11 X 2 1/4 NUT, LW
36	36	36	36	36	-	GALV	38	MACHINE BOLT 1/2-13 X 1 1/4", LW
-	-	-	-	-	-	-	37	-
-	-	-	-	-	-	-	36	-
-	-	-	-	-	-	-	35	-
-	-	-	-	-	-	-	34	-
3	-	-	-	-	DS043245196G20	COPPER	33	TMK40 BLADE ASSY 69KV 2000A
-	3	-	-	-	DS043245196G18	COPPER	32	TMK40 BLADE ASSY 46KV 2000A
-	-	3	-	-	DS043245196G16	COPPER	31	TMK40 BLADE ASSY 34.5KV 2000 AMP
-	-	-	3	-	DS043245196G14	COPPER	30	TMK40 BLADE ASSY 23KV 2000 AMP
-	-	-	-	3	DS043245196G12	COPPER	29	TMK40 BLADE ASSY 15KV 2000 AMP
1	1	1	1	1	003860SXG	GALV	28	OPERATING HANDLE MOUNTING BRACKET
1	1	1	1	1	005966SXG	GALV	27	EXTENSION PLATE
1	1	1	1	1	A9270	ALUM	26	OPERATING HANDLE LOCKING PLATE ASSY
1	1	1	1	1	A9265	GALV	25	OPERATING HANDLE ASSY
1	1	1	1	1	A9259	GALV	24	2" PIPE COUPLING
1	1	1	1	1	RM301380	GALV	23	2" IPS SCH 40 PIPE @ 10'-6"
1	1	1	1	1	RM301380	GALV	22	2" IPS SCH 40 PIPE @ 21'-0"
2	2	2	2	2	007133SXG	GALV	21	MOUNTING ANGLE
1	1	1	1	1	A9290	ALUM	20	PIPE GUIDE ASSY
1	1	1	1	1	A9247	-	19	THRUST BEARING ASSY
1	1	1	1	1	A9255	GALV	18	PIPE LEVER ASSY
1	1	1	1	1	RM301320	GALV	17	1" IPS SCH 80 PIPE @ (SEE DIM. C)
1	1	1	1	1	RM301320	GALV	16	1" IPS SCH 80 PIPE @ (SEE DIM. B)
-	-	-	-	-	-	-	15	-
-	-	-	-	-	-	-	14	-
5	5	5	5	5	A9253	GALV	13	1" CLEVIS ASSY
-	-	-	-	-	-	-	12	-
2	2	2	2	2	A9291S	GALV	11	BLADE STOP
1	1	1	1	1	A9234	ALUM	10	PIVOT ASSY 3" B.C. 2 LEVER (429)
2	2	2	2	2	A9233	ALUM	9	PIVOT ASSY 3" B.C. 1 LEVER (429)
1	1	1	1	1	011982SXG	GALV	8	THRUST BEARING MTG BRKT
6	6	6	6	6	00109SDXMGM	GALV	7	INSULATOR PEDESTAL
9	9	9	9	9	011098SDXMG	GALVSTL	6	3" TO 5" B.C. ADAPTER
3	-	-	-	-	012890SXG	GALVSTL	5	SWITCH BASE, TMK40 69KV 2000A
-	3	-	-	-	012889SXG	GALVSTL	4	SWITCH BASE, TMK40 46KV 2000A
-	-	3	-	-	012888SXG	GALVSTL	3	SWITCH BASE, TMK40 34.5KV 2000A
-	-	-	3	-	012887SXG	GALVSTL	2	SWITCH BASE, TMK40 23KV 2000A
-	-	-	-	3	012886SXG	GALVSTL	1	SWITCH BASE, TMK40 15KV 2000A
QUANTITY					PART	MATERIAL	ITEM	DESCRIPTION

TO:

CUSTOMER P.O.#

SERIAL NUMBER:

REVISIONS	DATE	BY	MARK
REV ITEM 25, WAS A9264	7-24-01	MR	A
DEL 3/4" IPS PIPE AND CLEVIS	1-25-02	MR	B
ADDED ITEM 8, ITEM 19 WAS A9248	3-12-02	MR	C

____KV ____2000 AMP

TMK40 15KV THRU 69KV 2000A, 100KA MOM
HORIZ.MTD FAST SWITCH 30°C

DRAWING #
SK010706
SHEET 1 OF 1

BY	DATE
TEP	7-6-01
APP'D BY	DATE

TURNER ELECTRIC CORPORATION
FAIRVIEW HEIGHTS, IL., USA