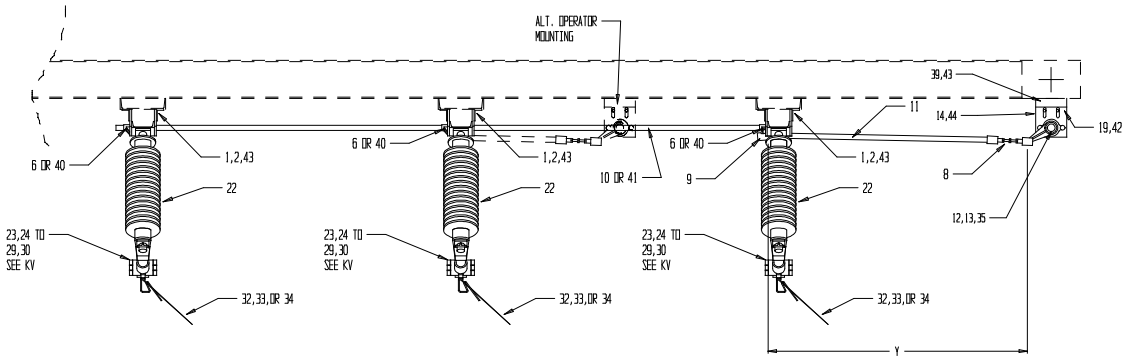

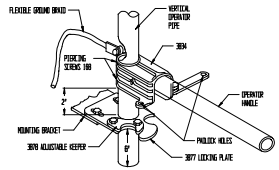

⑳ OPERATOR HANDLE DETAIL

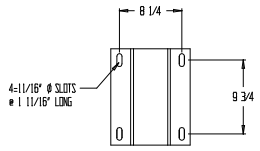

①② SWITCH BASE MTG. DETAIL

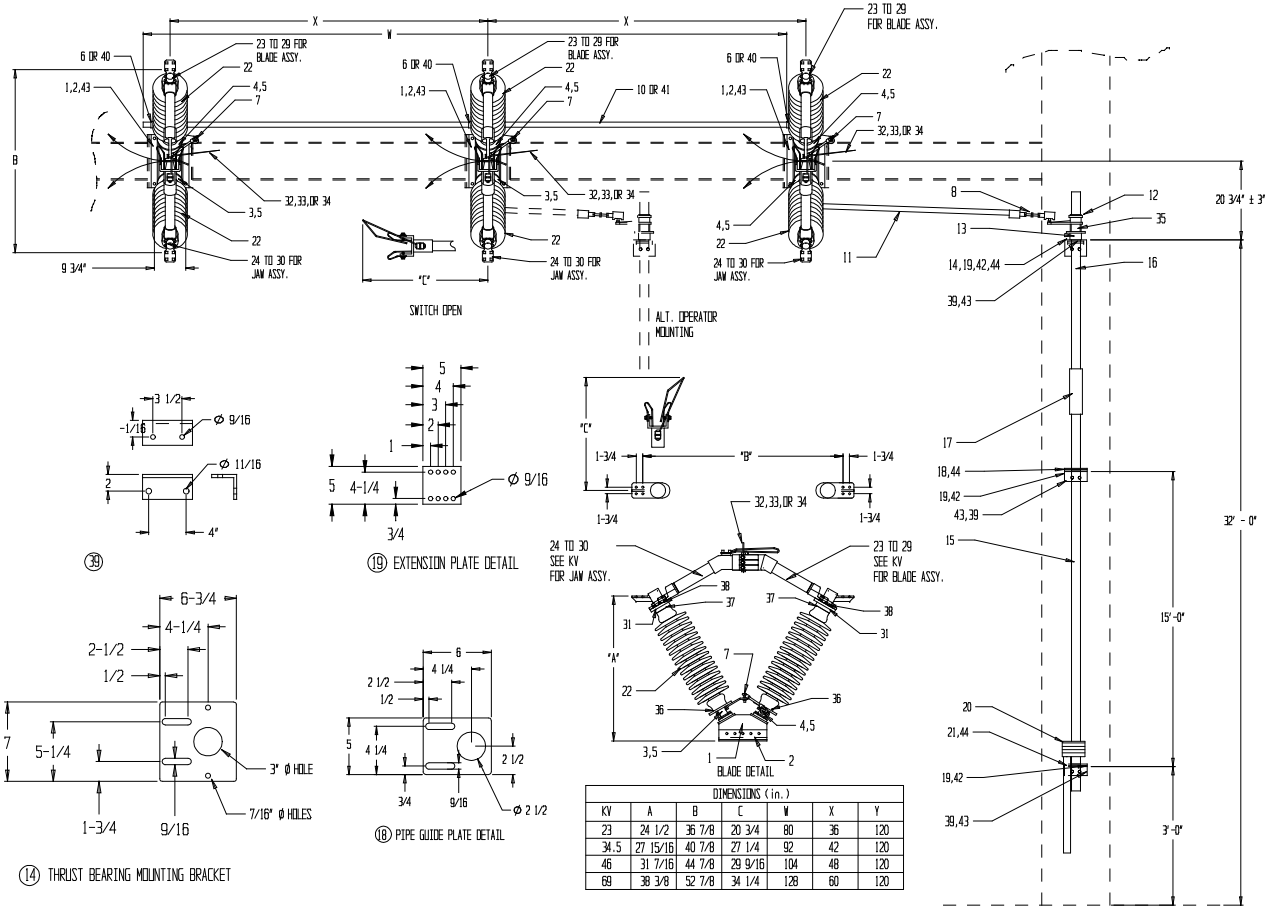

㊴

⑲ EXTENSION PLATE DETAIL

⑭ THRUST BEARING MOUNTING BRACKET

⑱ PIPE GUIDE PLATE DETAIL

DIMENSIONS (in.)						
KV	A	B	C	W	X	Y
23	24 1/2	36 7/8	20 3/4	80	36	120
34.5	27 15/16	40 7/8	27 1/4	92	42	120
46	31 7/16	44 7/8	29 9/16	104	48	120
69	38 3/8	52 7/8	34 1/4	128	60	120

QUANTITY					PART	MATERIAL	ITEM	DESCRIPTION
							51	
							50	
							49	
							48	
							47	
							46	
							45	
6	6	6	6		-	GALV	44	CARRIAGE BOLT 1/2"-13 X 1 1/2",N,LW
18	18	18	18		-	GALV	43	MACHINE BOLT 5/8"-11 X 1 3/4" N,LW
6	6	6	6		-	GALV	42	MACHINE BOLT 1/2" -13 X 1 1/2 N,LW
-	-	1	1		RM001280	GALV	41	3/4" IPS SCH 40 PIPE @ V
-	-	3	3		A9252	GALV	40	CLEVIS ASSY, 3/4" IPS
3	3	3	3		003860SXG	GALV	39	OPER/P.G./T.B. MTG BRKT
24	24	24	24		-	GALV	38	MACHINE BOLT 5/8"-11 X 2" N,LW
24	24	24	24		-	GALV	37	MACHINE BOLT 1/2"-13 X 2" LW
24	24	24	24		-	GALV	36	MACHINE BOLT 1/2"-13 X 1 1/4" N,LW
1	1	1	1		008284SXG	GALV	35	PIPE SPACER @ 2" LONG
-	-	-	-		-	-	34	QUICK WHIP ASSY (OPTIONAL)
3	3	3	-		A0004/A0005	-	33	ARCING HORN ASSY (STANDARD)
-	-	-	3		A0004/A0006	-	32	ARCING HORN ASSY, 23KV (STANDARD)
6	6	6	6		011098S10MG	ALUM	31	3" TO 5" BOLT CIRCLE ADAPTER
3	-	-	-		V152	ALUM	30	JAW ASSY 69KV 2000A
3	-	-	-		V116	ALUM	29	BLADE ASSY 69KV 2000A
-	3	-	-		V146	ALUM	28	JAW ASSY 46KV 2000A
-	3	-	-		V110	ALUM	27	BLADE ASSY 46KV 2000A
-	-	3	-		V141	ALUM	26	JAW ASSY 34.5KV 2000A
-	-	3	-		V105	ALUM	25	BLADE ASSY 34.5KV 2000A
-	-	-	3		V086	ALUM	24	JAW ASSY 23KV 2000A
-	-	-	3		V098	ALUM	23	BLADE ASSY 23KV 2000A
6	6	6	6		-	-	22	INSULATOR - SEE ORDER FOR DESCRIPTION
1	1	1	1		A9269	ALUM	21	LOCKING PLATE ASSY
1	1	1	1		A9264	GALV	20	OPERATING HANDLE ASSY
3	3	3	3		005866SXG	GALV	19	PIPE GUIDE/OPERATOR EXT PLATE
1	1	1	1		008437SXG	GALV	18	PIPE GUIDE
1	1	1	1		A9259	GALV	17	PIPE COUPLING
1	1	1	1		RM001380	GALV	16	2" IPS SCH 40 PIPE @ 10' - 6"
1	1	1	1		RM001380	GALV	15	2" IPS SCH 40 PIPE @ 21'-0"
1	1	1	1		009163SXG	GALV	14	THRUST BEARING MTG BRKT
1	1	1	1		A9247	-	13	THRUST BEARING ASSY
1	1	1	1		A9255	GALV	12	PIPE LEVER ASSY
1	1	1	1		RM001320	GALV	11	1" IPS SCH 80 PIPE @ Y (FIELD CUT)
1	1	-	-		RM001320	GALV	10	1" IPS SCH 80 PIPE @ W
1	1	1	1		A9282	-	9	CLEVIS CONVERTOR ASSY
1	1	1	1		A9280	-	8	ADJUSTABLE CLEVIS CONVERTOR ASSY
3	3	3	3		A9283	-	7	ROTATING INSULATOR CLEVIS ASSY
3	3	-	-		A9253	GALV	6	CLEVIS ASSY, 1" IPS
6	6	6	6		A9291S	GALV	5	BLADE STOP
4	4	4	4		A9236-2	BRASS	4	PIVOT ASSY 2 LEVER (25B)
2	2	2	2		A9235-2	BRASS	3	PIVOT ASSY 1 LEVER (25B)
6	6	6	6		008690SXG	GALV	2	SWITCH BASE MOUNTING ANGLE
3	3	3	3		008691SXG	GALV	1	SWITCH BASE

TO:

TCV2V069S20/112
TCV2V04S20/108
TCV2V03S20/104
TCV2V02S20/138

CUSTOMER P.O.#

SERIAL NUMBER:

REVISIONS	DATE	BY	MARK
'C' DIM. AT 23KV WAS 25"	7-3-02	MRP	A

2000 AMP

TCV2V-15 THRU 69KV 2000 AMP
CENTER "V" SWITCH VERT. MTD.

DRAWING #
SK010611
SHEET 1 OF 1

BY	DATE
MRP	6-14-01
APP'D BY	DATE

TURNER ELECTRIC CORPORATION
FAIRVIEW HEIGHTS, IL., USA