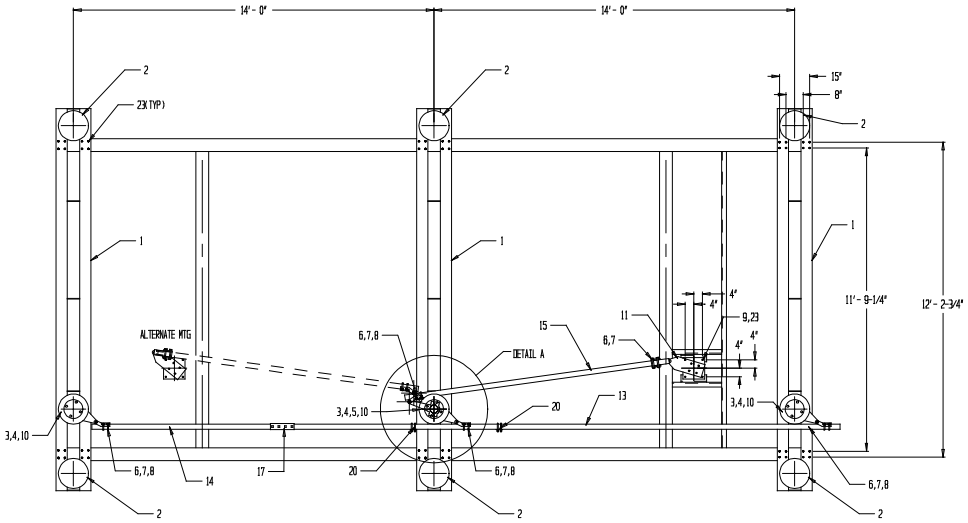

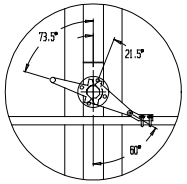

DETAIL A
LEVER SETTING DETAIL

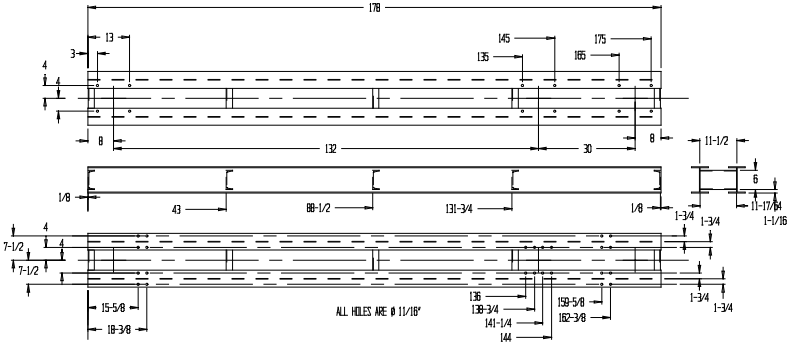

① SWITCH BASE DETAIL

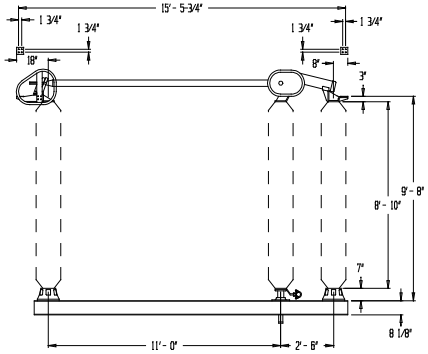

㉒ TMK40A 345KV 3000AMP BLADE DETAIL

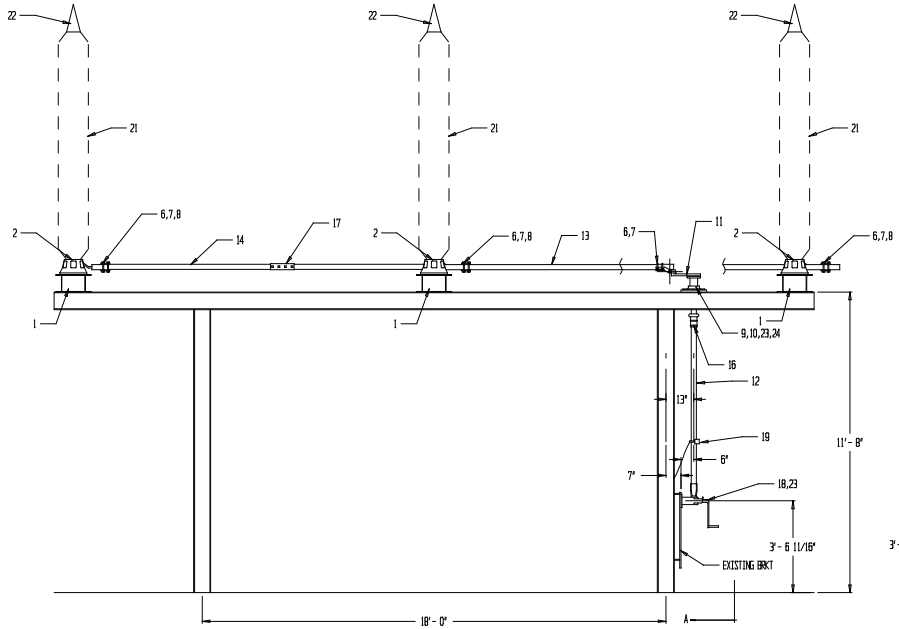

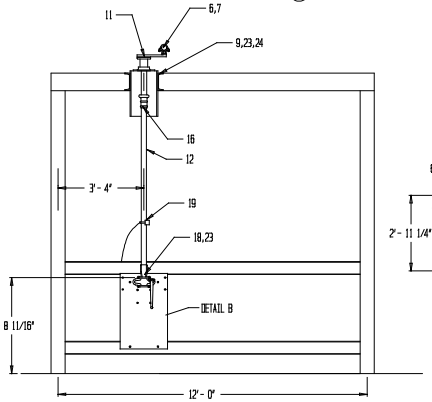

SECTION A-A

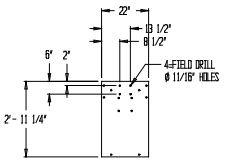

DETAIL B
HOLE PLACEMENT FOR S.S. WORM
GEAR ON EXISTING PLATE

PER COM. ED. DWGS# EM 60006 SHT 1 THRU 5

QUANTITY	PART	MATERIAL	ITEM	DESCRIPTION
-	-	-	32	-
-	-	-	31	-
-	-	-	30	-
-	-	-	29	-
-	-	-	28	-
-	-	-	27	-
-	-	-	26	-
-	-	-	25	-
-	-	-	24	-
56	-	GALV	23	MACHINE BOLT 5/8"-11 x 1 3/4" N,LW
3	DL064271X072	ALUM	22	TMK40A-345KV-3000AMP BLADE ASSY
9	-	-	21	INSULATOR (TR 387)
2	DS115824W000	GALV	20	SWITCH STOP FOR 2" PIPE
1	A9719	COPPER	19	GROUND BRAID ASSY
1	MP560040X	-	18	SOUTHERN STATES WORM GEAR OPERATOR
1	A8259	GALV	17	2" PIPE COUPLING
1	DS112218D000	GALV	16	2" PIPE TO 2 1/2" DCT. COUPLING
1	RM801380	GALV	15	2" IPS SCH 40 PIPE @ 11'-0"
1	RM801380	GALV	14	2" IPS SCH 40 PIPE @ 8'-0"
1	RM801380	GALV	13	2" IPS SCH 40 PIPE @ 21'-0"
1	RM801380	GALV	12	2" IPS SCH 80 PIPE @ 8'-0"
1	DS128497X061	GALV	11	ADJUSTABLE T.B. LEVER ASSY
6	DS049091D000	GALV	10	PIVOT ASSY SUPPORT PLATE
1	DS049635D000	GALV	9	THRUST BEARING PIVOT ASSY
4	DS043430D000	ALUM	8	CLEVIS PIN SPACER
5	DS043402D021	GALV	7	CLEVIS PIN
5	DS111309X001	GALV	6	2" CLEVIS ASSY
1	DS111320D000	GALV	5	12" RAD. LEVER FOR 3 1/2" DCT.
3	DL082287X4XA	GALV	4	12" RAD. OFFSET PIVOT LEVER
3	DS049850X010	ALUM	3	7" B.C. PIVOT ASSY
6	DM000499X130A	ALUM	2	INSULATOR PEDESTAL
3	012800SXG	GALV	1	SWITCH BASE

TO:

CUSTOMER P.O.# | SERIAL NUMBER:

REVISIONS	DATE	BY	MARK
REV LTERS 3,4 FROM 9" B.C. TO 7" B.C. PART #5	7-26-00	TEP	A

345 KV — 3000 AMP

TMK40A34530/43 VERT'L BREAK
SWITCH CONTROL MECH.

DRAWING #	BY	DATE
SK000316	TEP	3-14-00
SHEET 1 OF 1	APP'D BY	DATE

TURNER ELECTRIC CORPORATION
FAIRVIEW HEIGHTS, IL., USA